Explosion Proof Thermowell Assembly

Type TS with Fenwal Thermoswitch

APPLICATIONS

TS-ER thermostat is designed for use in hazardous locations (Class 1, Group D; Class 2, Groups E, F, and G).

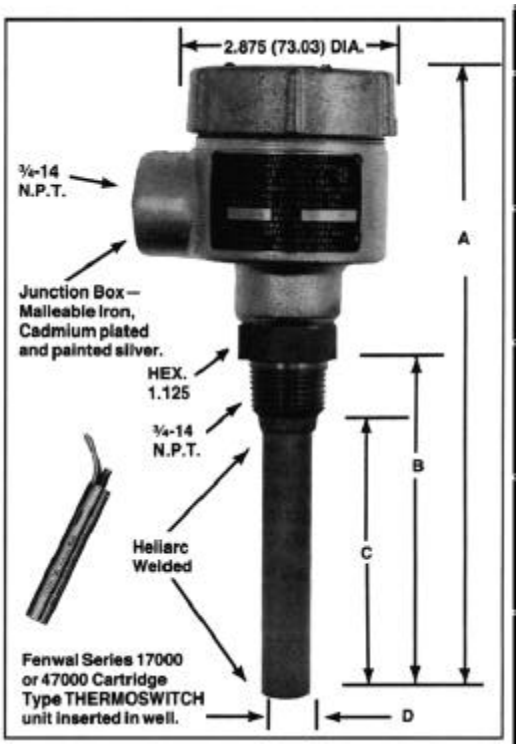

STANDARD FEATURES

A Fenwal Thermoswitch is inserted into a bar stock type 304 St.Stl. thermowell. The thermowell has a pressure rating of 3000 psi at 600° F. The explosion proof junction box has a corrosion resistant fused coating.

OPTIONS

Gaumer calibrated temperature set point with installed lock down accessory.

DIMENSIONS (Refer to photo)

A = 8.00 +/- 0.25 in

B = 4.28 +/- 0.06 in

C = 3.56 +/- 0.03 in

D = 0.656 +/- 0.004 in

Catalog Number	Diam (In.)	Length (Inches)	Sheath Material	ContactAction on Temp Rise	Features	Wt. (lbs.)
TSLO-ER	0.781	4.250	Brass	Opens	304SS Thermowell 3/4NPT	2.0
TSLC-ER	0.781	4.250	Brass	Closes	304SS Thermowell 3/4NPT	2.0
TSHO-ER	0.781	4.250	St.Steel	Opens	304SS Thermowell 3/4NPT	2.0
TSHC-ER	0.781	4.250	St.Steel	Closes	304SS Thermowell 3/4NPT	2.0

GAUMER COMPANY, INC. · 13616 Hempstead Road · Houston · Texas · 77040 · Ph: 713.460.5200
Ph: 800.460.5200 · Fx: 713.460.1444 · Fx: 800.460.5700 · www.gaumer.com · sales@gaumer.com